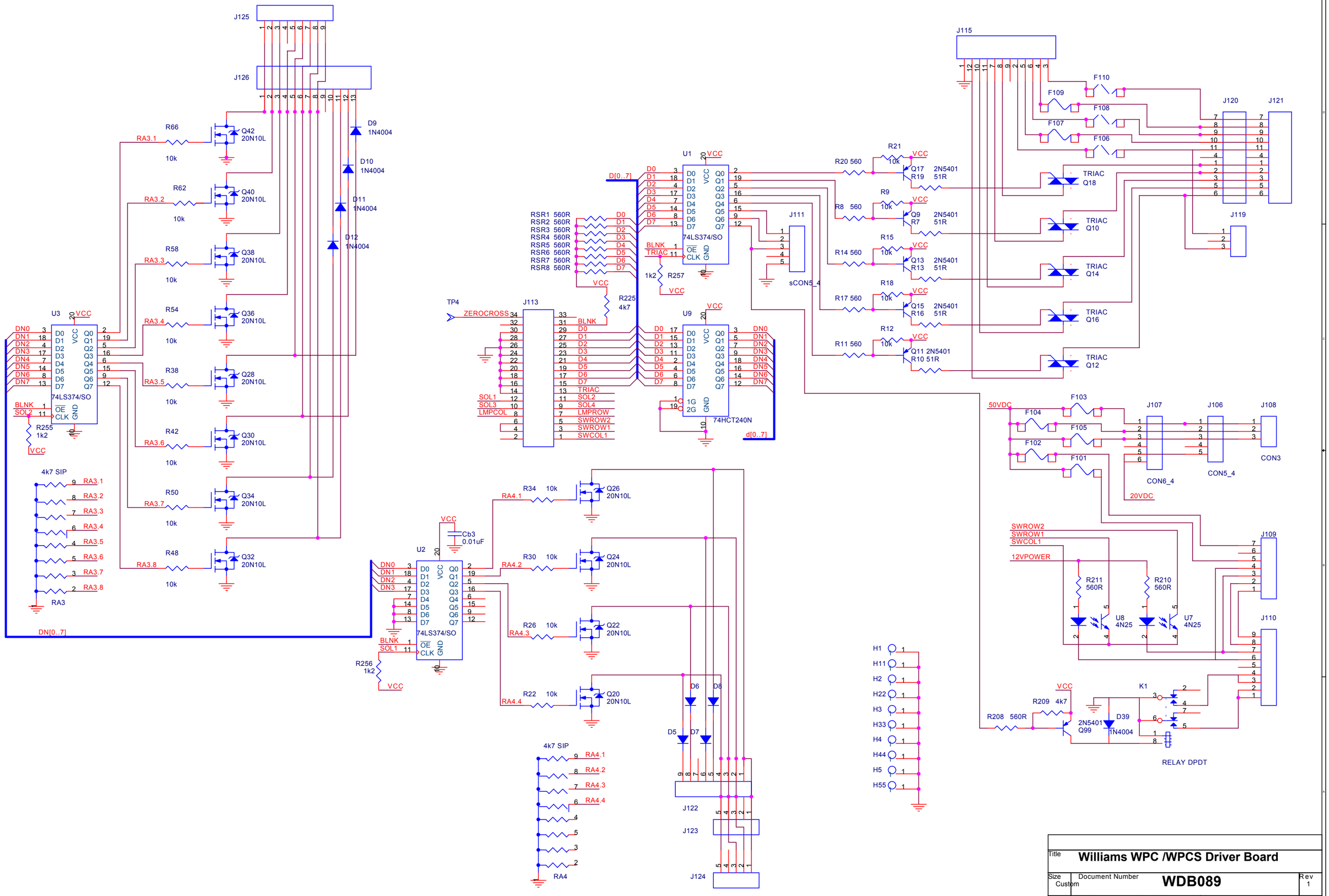

Title	Williams WPC /WPCS Driver Board	
Size Custom	Document Number WDB089	Rev 1
Date: Saturday, June 13, 2009	Sheet 1 of 1	