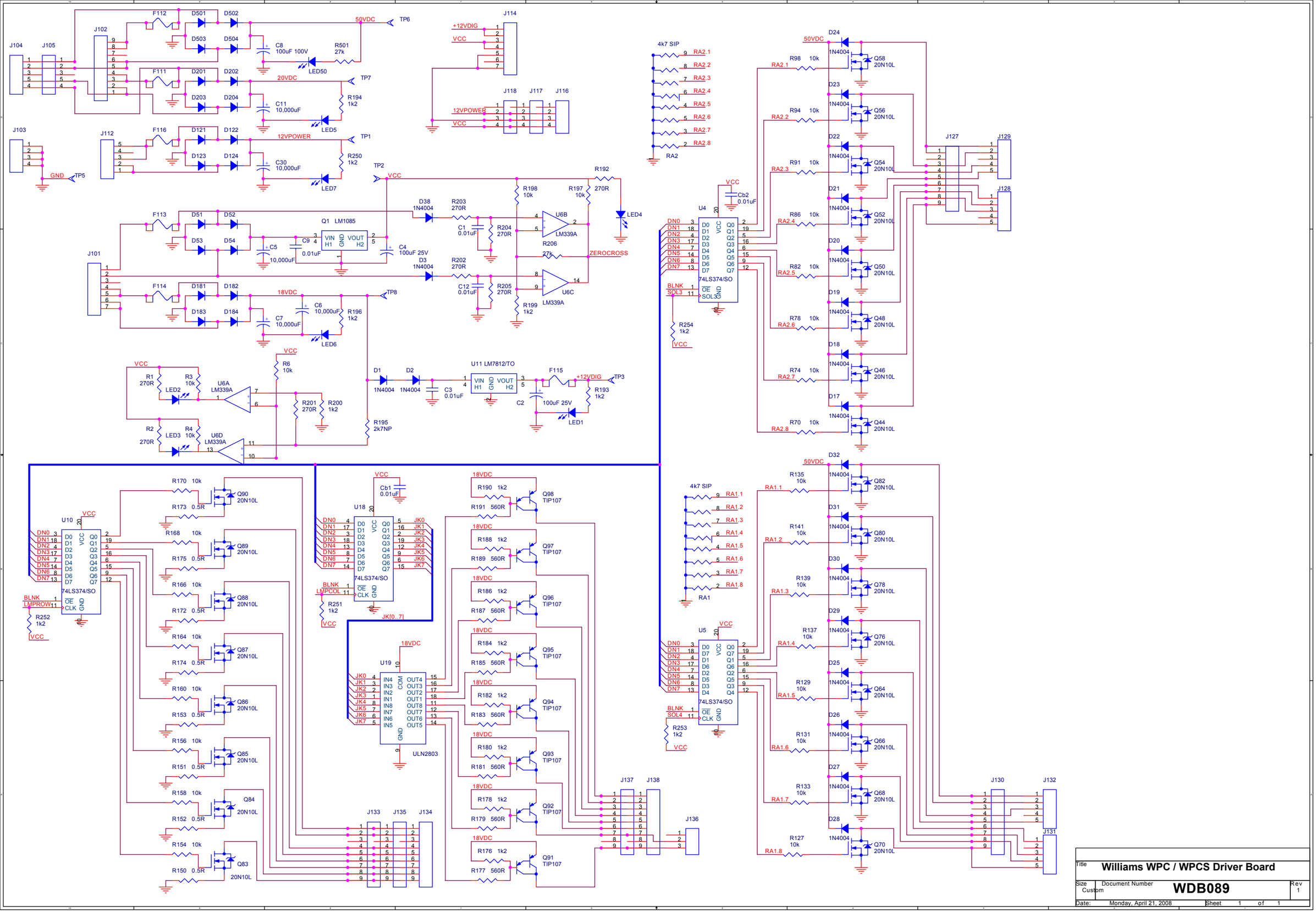

Title	Williams WPC / WPCS Driver Board		
Size Custom	Document Number WDB089		Rev 1
Date: Monday, April 21, 2008	Sheet 1 of 1		