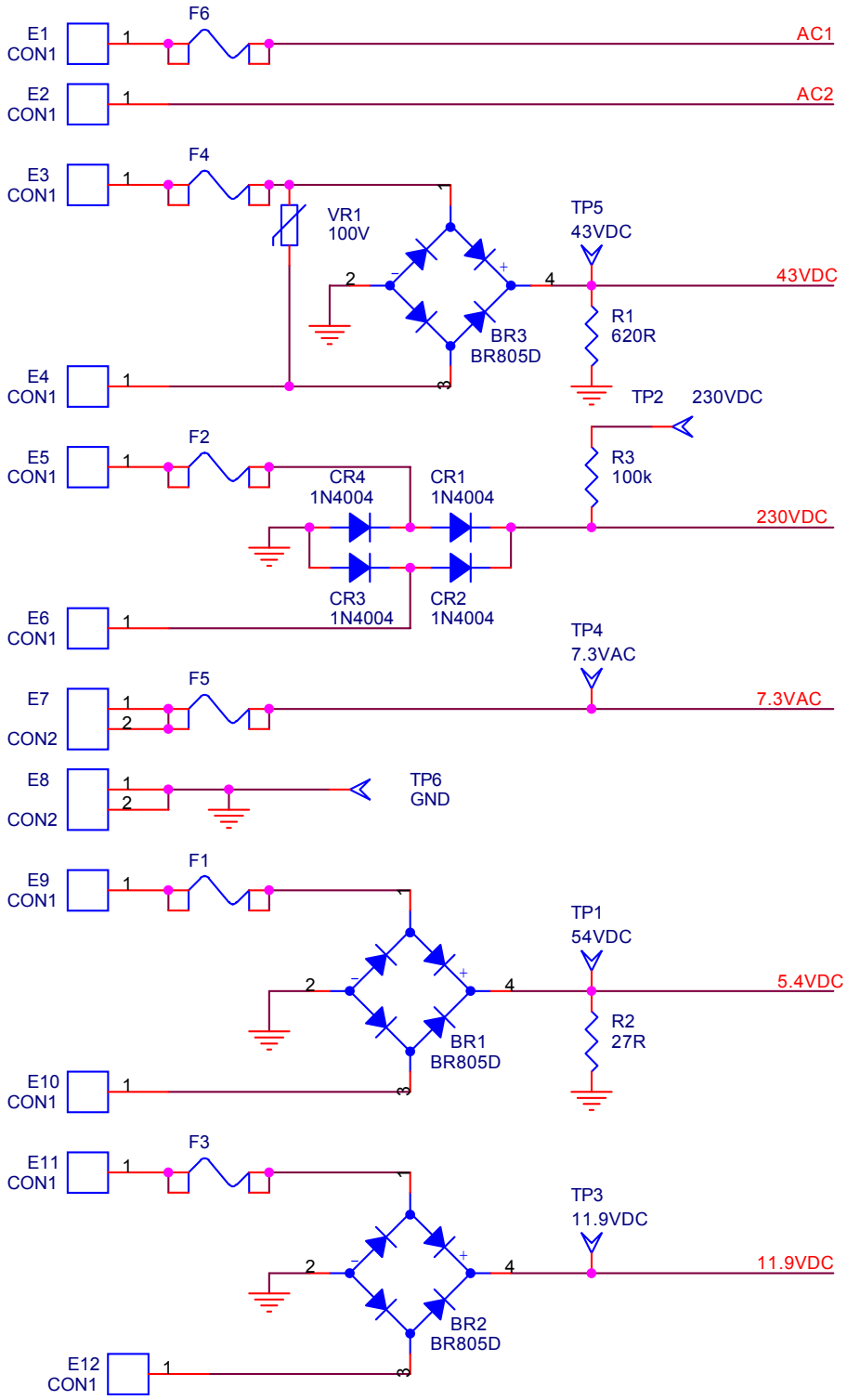

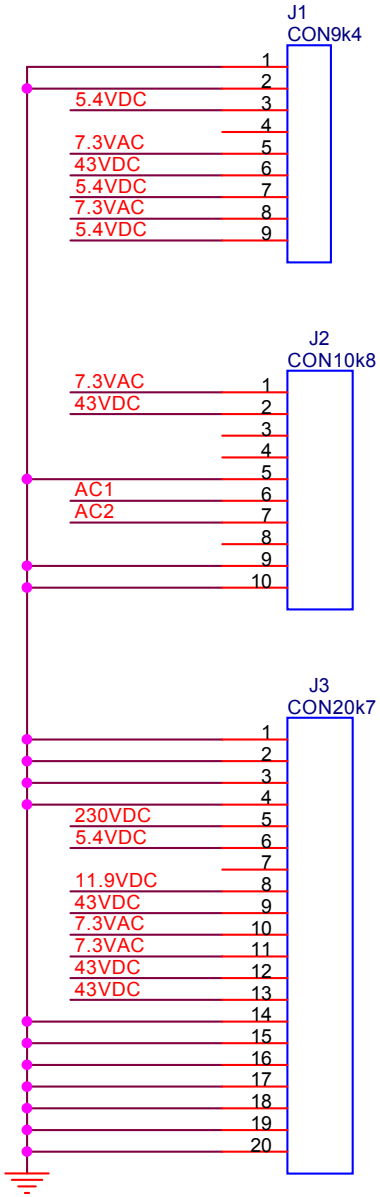

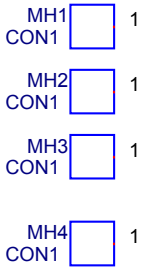

Fuse Values As Shipped:

F1 - 10A FB
F2 - 3/4A SB
F3 - 4A SB
F4 - 5A SB
F5 - 20A FB
F6 - 3A SB

Verify Value For Your Game

Title	**Bally Power Supply AS-2518-18**	
Size A	Document Number **BPS018**	Rev 1
Date: Thursday, August 20, 2009	Sheet 1 of 1	